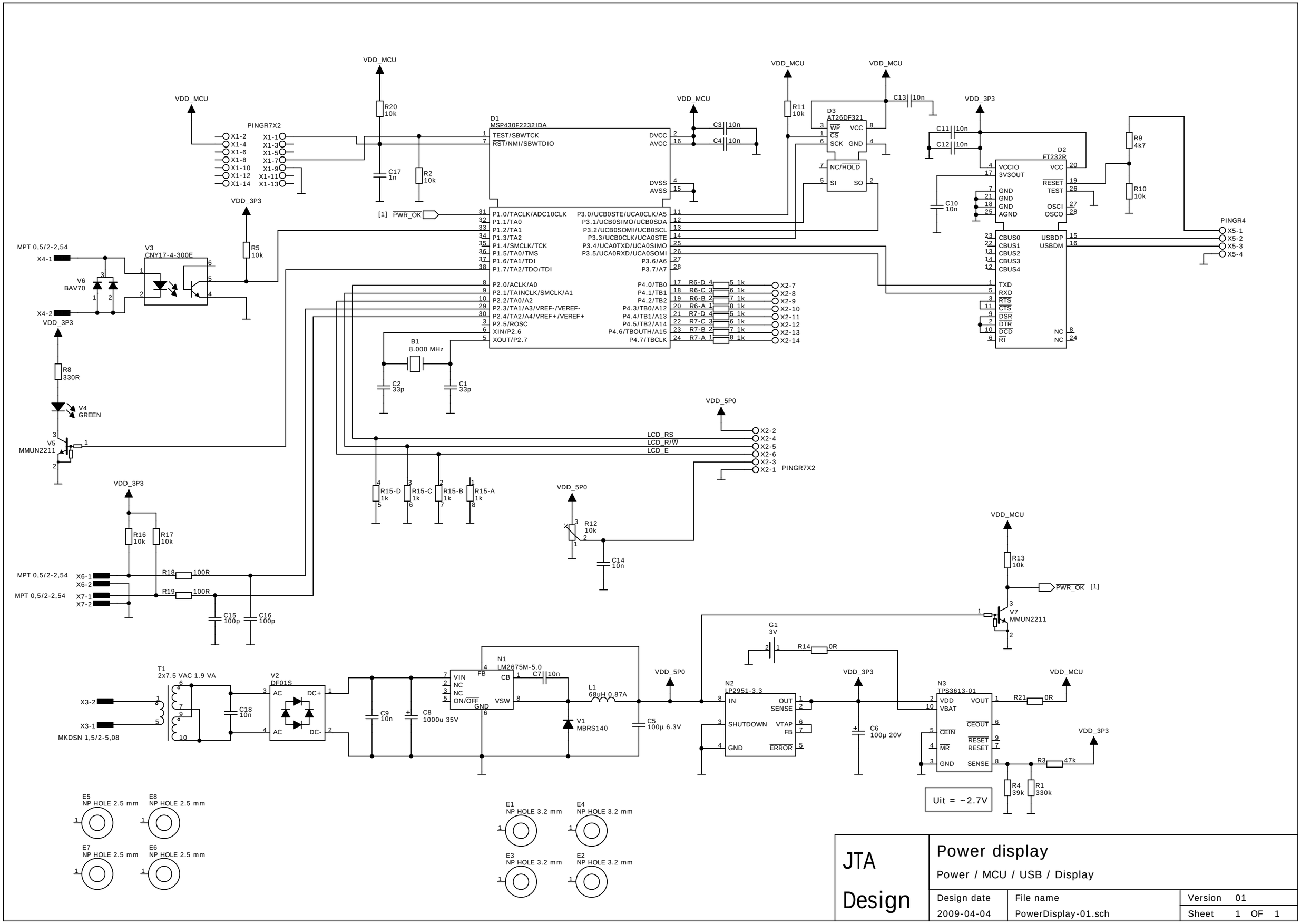
D1
MSP430F2232IDA
TEST/SBWTCK
RST/NMI/SBWTDIO
DVCC
AVCC
DVSS
AVSS
P1.0/TACLK/ADC10CLK
P1.1/TA0
P1.2/TA1
P1.3/TA2
P1.4/SMCLK/TCK
P1.5/TA0/TMS
P1.6/TA1/TDI
P1.7/TA2/TDO/TDI
P2.0/ACLK/A0
P2.1/TAINCLK/SMCLK/A1
P2.2/TA0/A2
P2.3/TA1/A3/VREF-/VEREF-
P2.4/TA2/A4/VREF+/VEREF+
P2.5/ROSC
XIN/P2.6
XOUT/P2.7
P3.0/UCB0STE/UCA0CLK/A5
P3.1/UCB0SIMO/UCB0SDA
P3.2/UCB0SOMI/UCB0SCL
P3.3/UCB0CLK/UCA0STE
P3.4/UCA0TXD/UCA0SIMO
P3.5/UCA0RXD/UCA0SOMI
P3.6/A6
P3.7/A7
P4.0/TB0
P4.1/TB1
P4.2/TB2
P4.3/TB0/A12
P4.4/TB1/A13
P4.5/TB2/A14
P4.6/TBOUTH/A15
P4.7/TBCLK
[1] PWR_OK
VDD_MCU
VDD_3P3
VDD_5P0
PINGR7X2
X1-2
X1-4
X1-6
X1-8
X1-10
X1-12
X1-14
X1-1
X1-3
X1-5
X1-7
X1-9
X1-11
X1-13
R20 10k
C17 1n
R2 10k
C3 10n
C4 10n
R11 10k
D3
AT26DF321
WP
CS
SCK
VCC
GND
NC/HOLD
SI
SO
C13 10n
C11 10n
C12 10n
C10 10n
D2
FT232R
VCCIO
3V3OUT
GND
AGND
RESET
TEST
OSCI
OSCO
CBUS0
CBUS1
CBUS2
CBUS3
CBUS4
USBDP
USBDM
TXD
RXD
RTS
CTS
DSR
DTR
DCD
RI
NC
R9 4k7
R10 10k
PINGR4
X5-1
X5-2
X5-3
X5-4
MPT 0,5/2-2,54
X4-1
X4-2
V3
CNY17-4-300E
V6
BAV70
R5 10k
R8 330R
V4
GREEN
V5
MMUN2211
B1
8.000 MHz
C2 33p
C1 33p
R6-D
R6-C
R6-B
R6-A
R7-D
R7-C
R7-B
R7-A
1k
X2-7
X2-8
X2-9
X2-10
X2-11
X2-12
X2-13
X2-14
LCD_RS
LCD_R/W
LCD_E
X2-2
X2-4
X2-5
X2-6
X2-3
X2-1
R15-D 1k
R15-C 1k
R15-B 1k
R15-A 1k
R12 10k
C14 10n
R16 10k
R17 10k
MPT 0,5/2-2,54
X6-1
X6-2
X7-1
X7-2
R18 100R
R19 100R
C15 100p
C16 100p
R13 10k
PWR_OK [1]
V7
MMUN2211
G1
3V
R14 0R
T1
2x7.5 VAC 1.9 VA
X3-2
X3-1
MKDSN 1,5/2-5,08
C18 10n
V2
DF01S
AC
DC+
DC-
C9 10n
C8 1000u 35V
N1
LM2675M-5.0
VIN
NC
NC
ON/OFF
FB
CB
VSW
GND
C7 10n
L1
68uH 0.87A
V1
MBRS140
C5 100µ 6.3V
N2
LP2951-3.3
IN
OUT
SENSE
SHUTDOWN
VTAP
FB
GND
ERROR
C6 100µ 20V
N3
TPS3613-01
VDD
VBAT
VOUT
CEIN
CEOUT
MR
RESET
GND
SENSE
R21 0R
R3 47k
R4 39k
R1 330k
Uit = ~2.7V
E5
NP HOLE 2.5 mm
E8
NP HOLE 2.5 mm
E7
NP HOLE 2.5 mm
E6
NP HOLE 2.5 mm
E1
NP HOLE 3.2 mm
E4
NP HOLE 3.2 mm
E3
NP HOLE 3.2 mm
E2
NP HOLE 3.2 mm
JTA
Design
Power display
Power / MCU / USB / Display
Design date
2009-04-04
File name
PowerDisplay-01.sch
Version 01
Sheet 1 OF 1