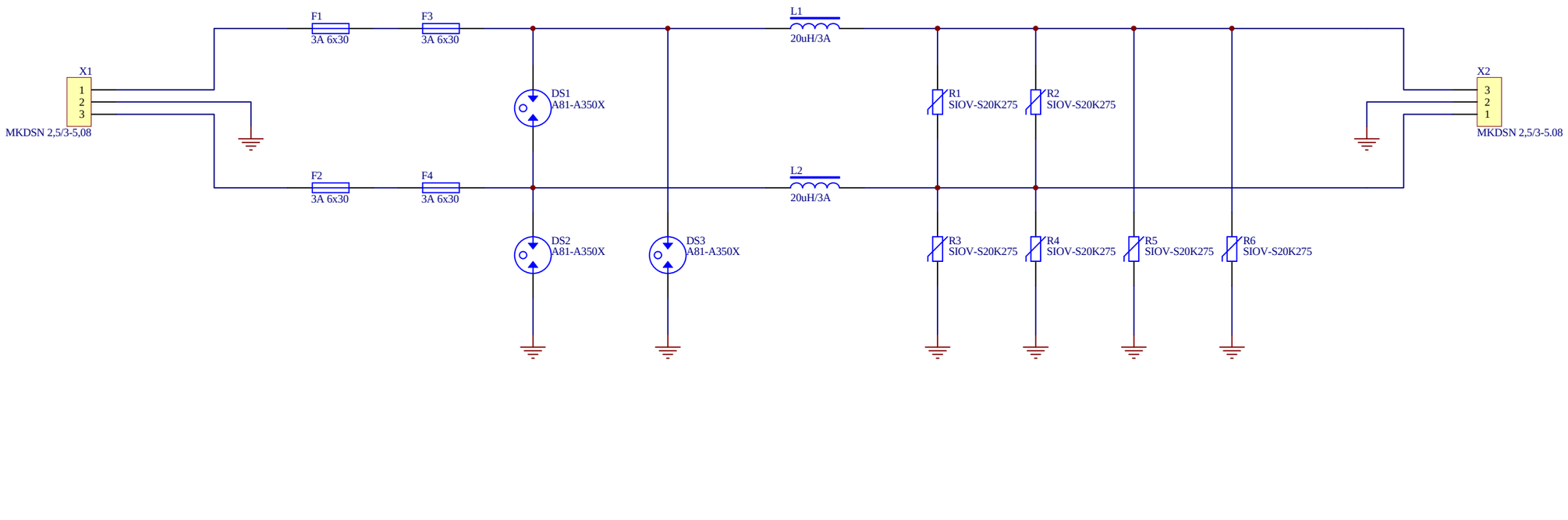

Title *Surge protection board*			**JTA DESIGN**
Size: A3	Number:	Revision:	
File: SurgeProtect.Sch		Date: 4-Sep-2007 Time: 20:47:41	Sheet 0 of 0

Protel Technology