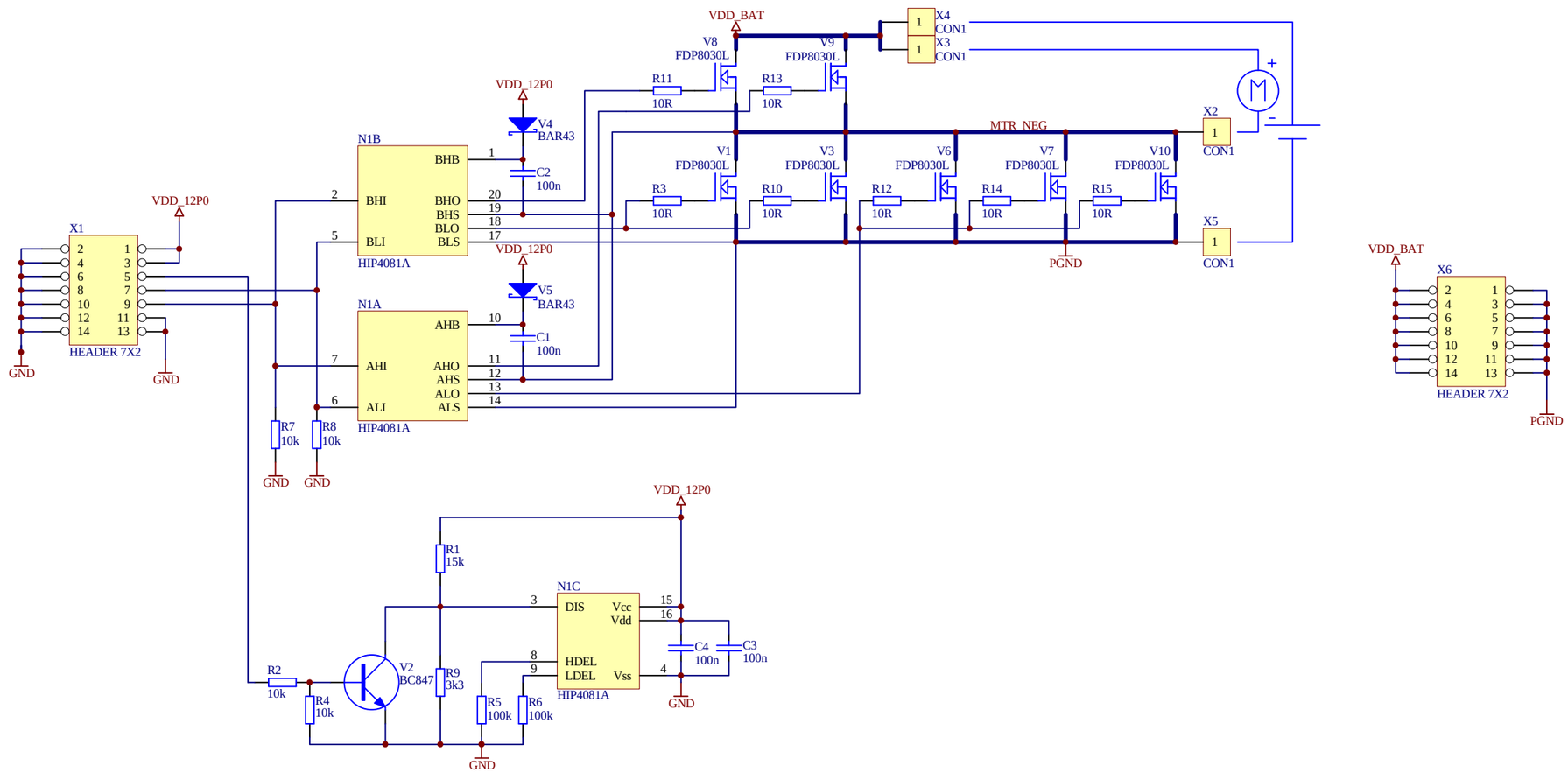

Title *ESC - Power stage*			JTA DESIGN
Size: A3	Number:	Revision:	
File: PowerStage.Sch	Date: 17-Apr-2005 Time: 20:28:49	Sheet 1 of 1	Protel Technology