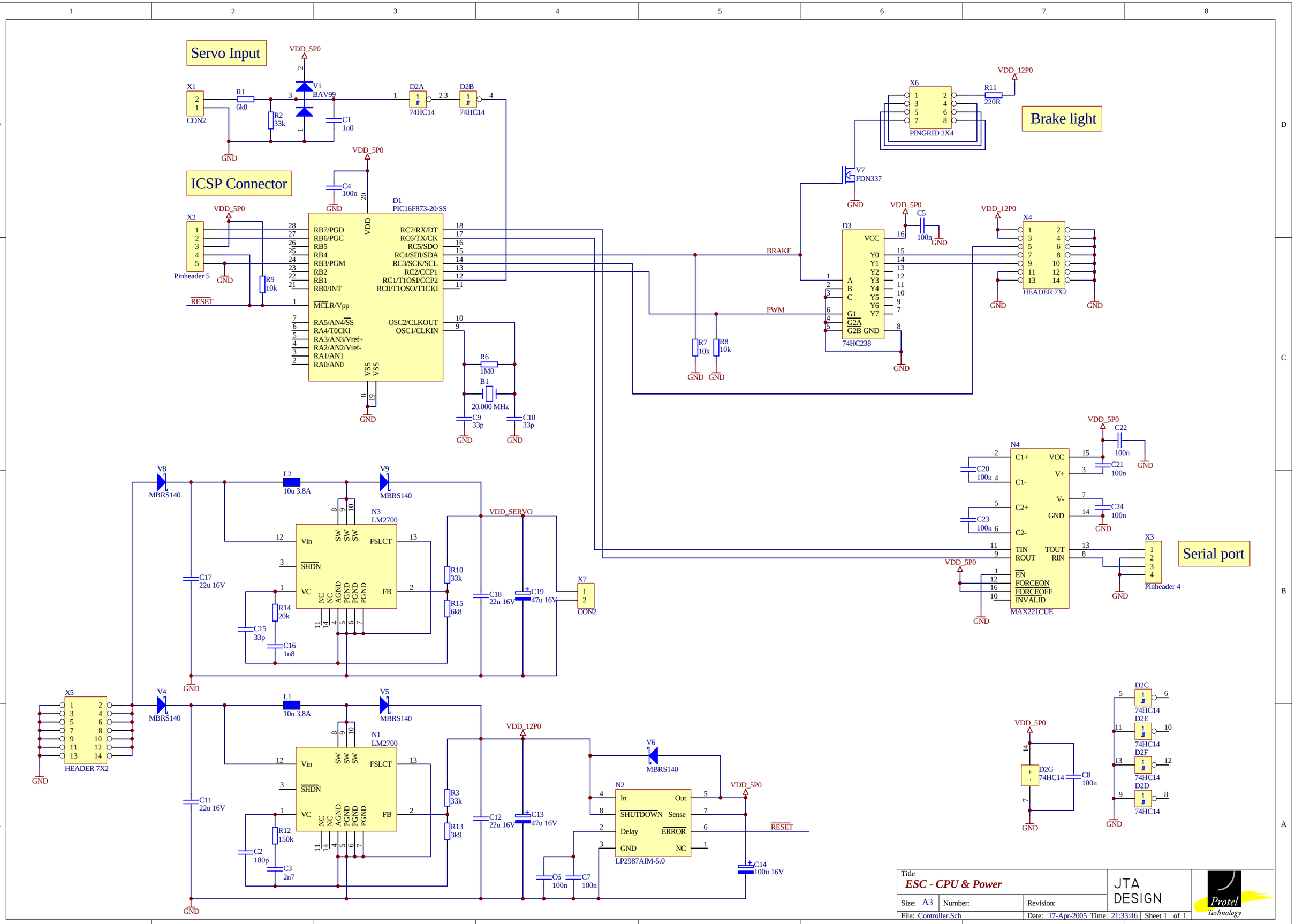
Servo Input
ICSP Connector
Brake light
Serial port
X1
CON2
R1
6k8
R2
33k
V1
BAV99
C1
1n0
D2A
74HC14
D2B
74HC14
VDD_5P0
GND
C4
100n
D1
PIC16F873-20/SS
X2
Pinheader 5
R9
10k
RESET
RB7/PGD
RB6/PGC
RB5
RB4
RB3/PGM
RB2
RB1
RB0/INT
MCLR/Vpp
RA5/AN4/SS
RA4/T0CKI
RA3/AN3/Vref+
RA2/AN2/Vref-
RA1/AN1
RA0/AN0
RC7/RX/DT
RC6/TX/CK
RC5/SDO
RC4/SDI/SDA
RC3/SCK/SCL
RC2/CCP1
RC1/T1OSI/CCP2
RC0/T1OSO/T1CKI
OSC2/CLKOUT
OSC1/CLKIN
R6
1M0
B1
20.000 MHz
C9
33p
C10
33p
BRAKE
PWM
R7
10k
R8
10k
X6
PINGRID 2X4
R11
220R
VDD_12P0
V7
FDN337
D3
74HC238
C5
100n
X4
HEADER 7X2
N4
MAX221CUE
C20
100n
C21
100n
C22
100n
C23
100n
C24
100n
TIN
ROUT
TOUT
RIN
EN
FORCEON
FORCEOFF
INVALID
X3
Pinheader 4
V8
MBRS140
L2
10u 3.8A
V9
MBRS140
N3
LM2700
Vin
SHDN
VC
FSLCT
FB
SW
NC
AGND
PGND
R10
33k
R15
6k8
R14
20k
C15
33p
C16
1n8
C17
22u 16V
C18
22u 16V
C19
47u 16V
VDD_SERVO
X7
CON2
X5
HEADER 7X2
V4
MBRS140
L1
10u 3.8A
V5
MBRS140
N1
LM2700
R3
33k
R13
3k9
R12
150k
C2
180p
C3
2n7
C11
22u 16V
C12
22u 16V
C13
47u 16V
VDD_12P0
V6
MBRS140
N2
LP2987AIM-5.0
In
Out
SHUTDOWN
Sense
Delay
ERROR
GND
NC
C6
100n
C7
100n
C14
100u 16V
D2G
74HC14
C8
100n
D2C
D2E
D2F
D2D
Title
ESC - CPU & Power
Size: A3
Number:
Revision:
File: Controller.Sch
Date: 17-Apr-2005 Time: 21:33:46
Sheet 1 of 1
JTA DESIGN
Protel Technology