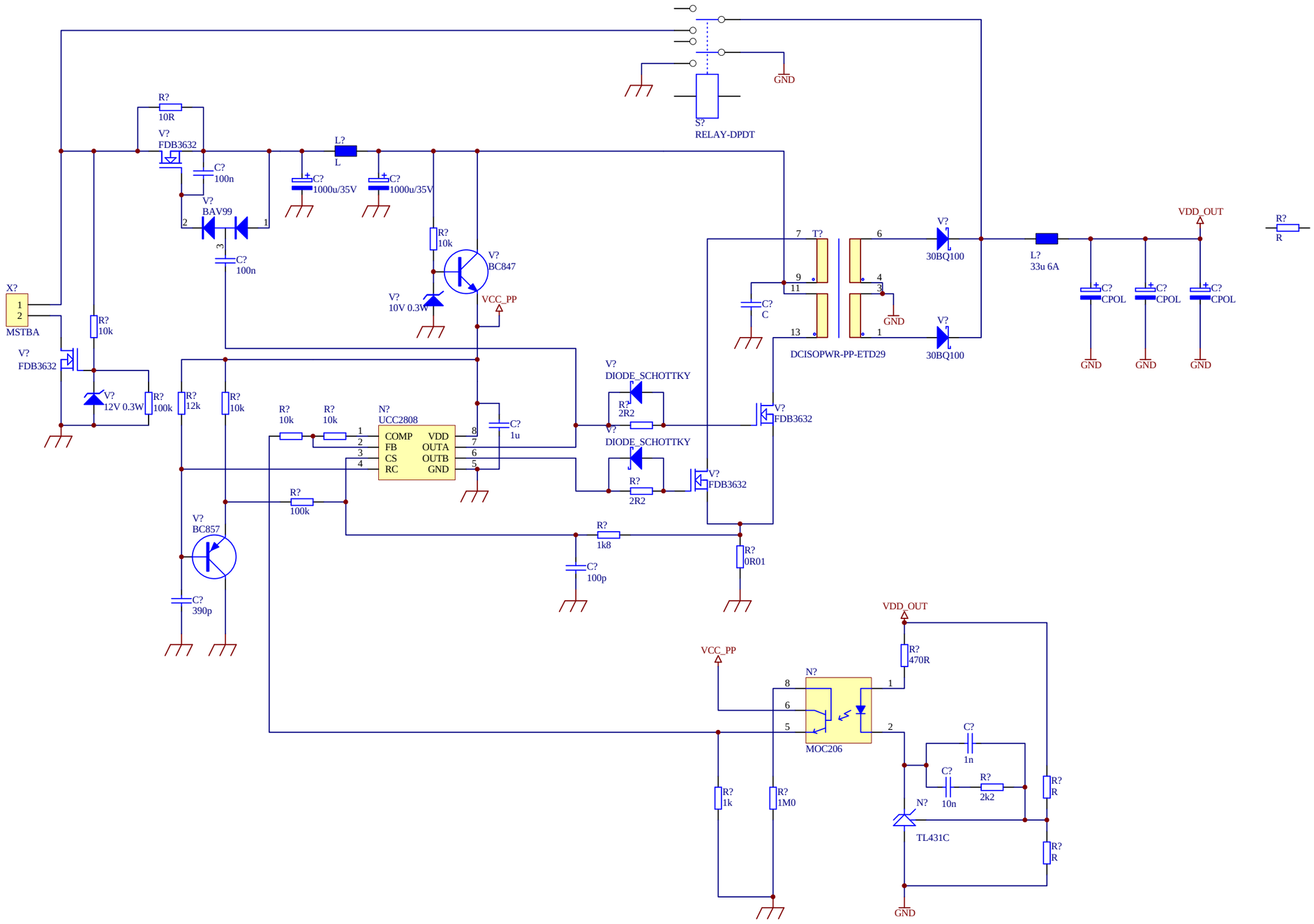

Title: **DC Isolated 12V 50W power**			Janne Ahonen Aittolammentie 3 as 7 70780 Kuopio FINLAND
Size: A3	Number:	Revision:	
File: DCIsoPower.Sch	Date: 22-Sep-2004 Time: 12:20:11	Sheet 0 of 0	

Protel Technology