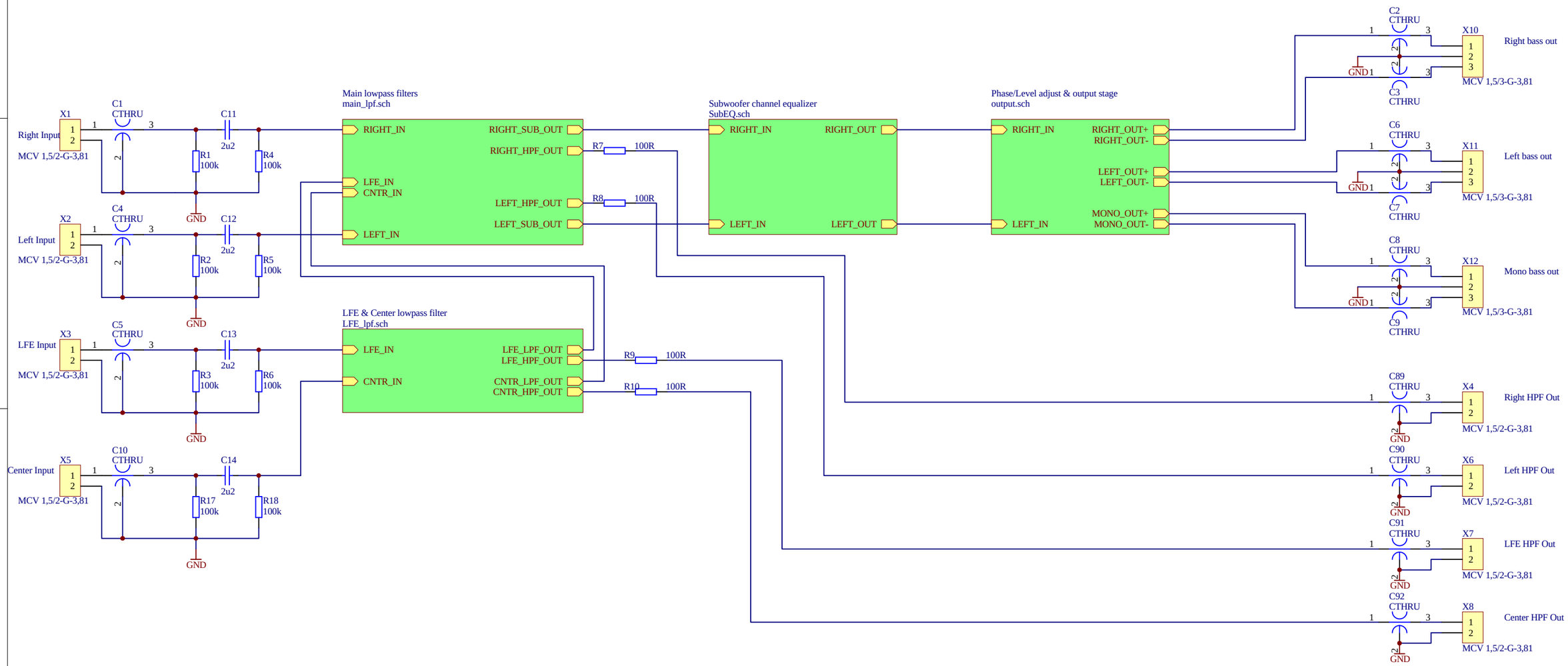

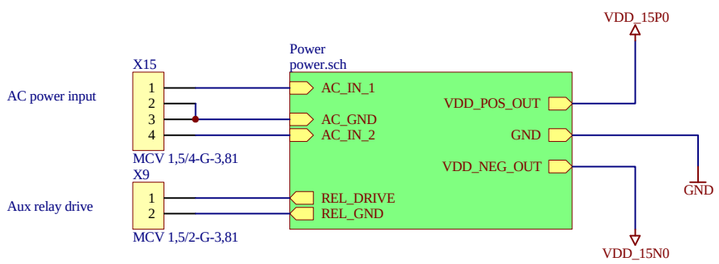

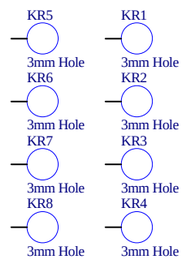

Title: *Stereo subwoofer crossover with LFE input*			*Janne Ahonen* *Aittolammentie 3 as 7* *70780* *Kuopio* *FINLAND*
Size: A3	Number:	Revision: V0.02	
File: StereoBassxover.prj	Date: 16-Apr-2003	Time: 18:02:41	Sheet 1 of 6

Protel Technology

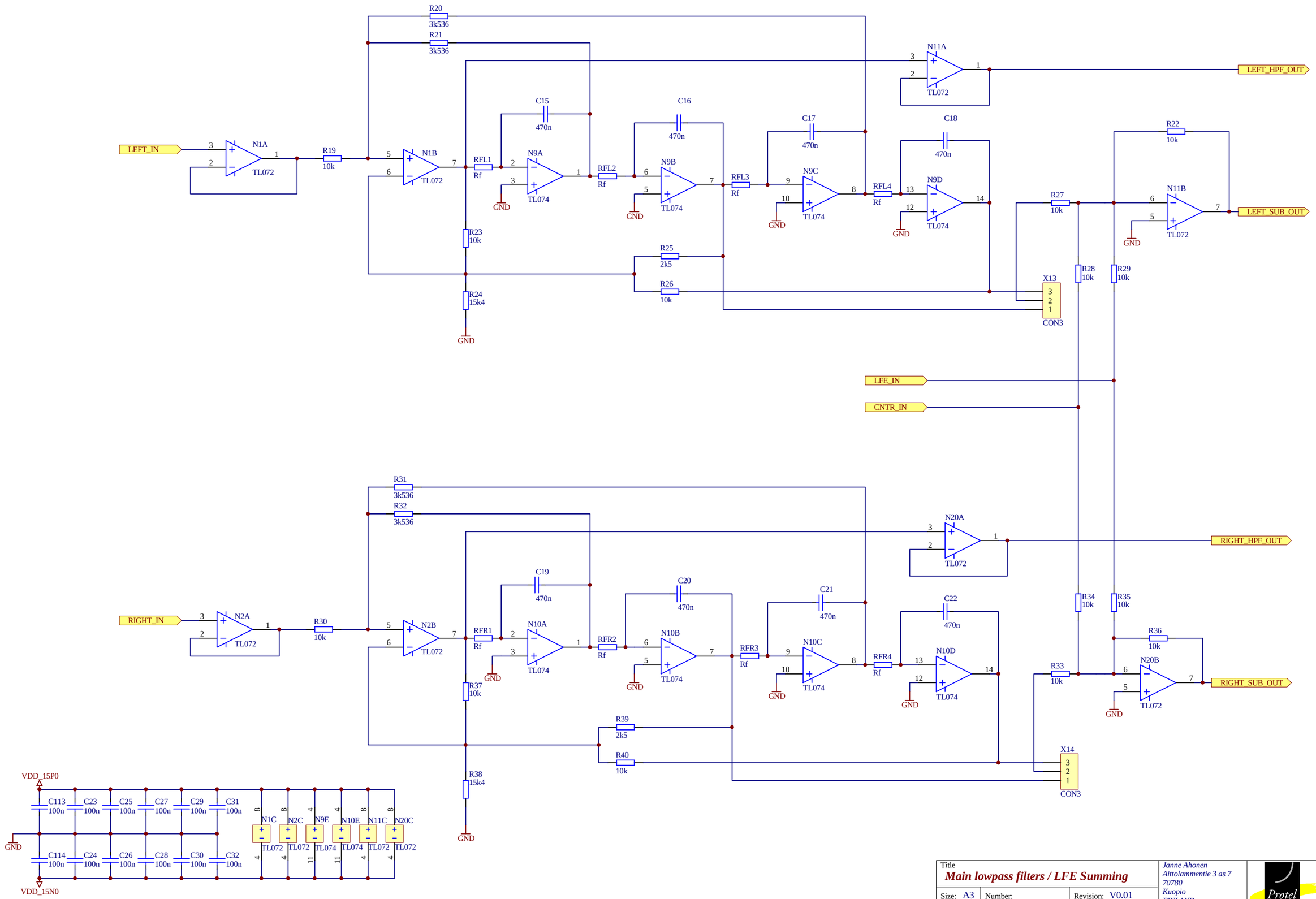

Title: *Main lowpass filters / LFE Summing*			Janne Ahonen Aittolammentie 3 as 7 70780 Kuopio FINLAND
Size: A3	Number:	Revision: V0.01	
File: main_lpf.sch		Date: 16-Apr-2003 Time: 18:02:42	Sheet 2 of 6

Protel Technology

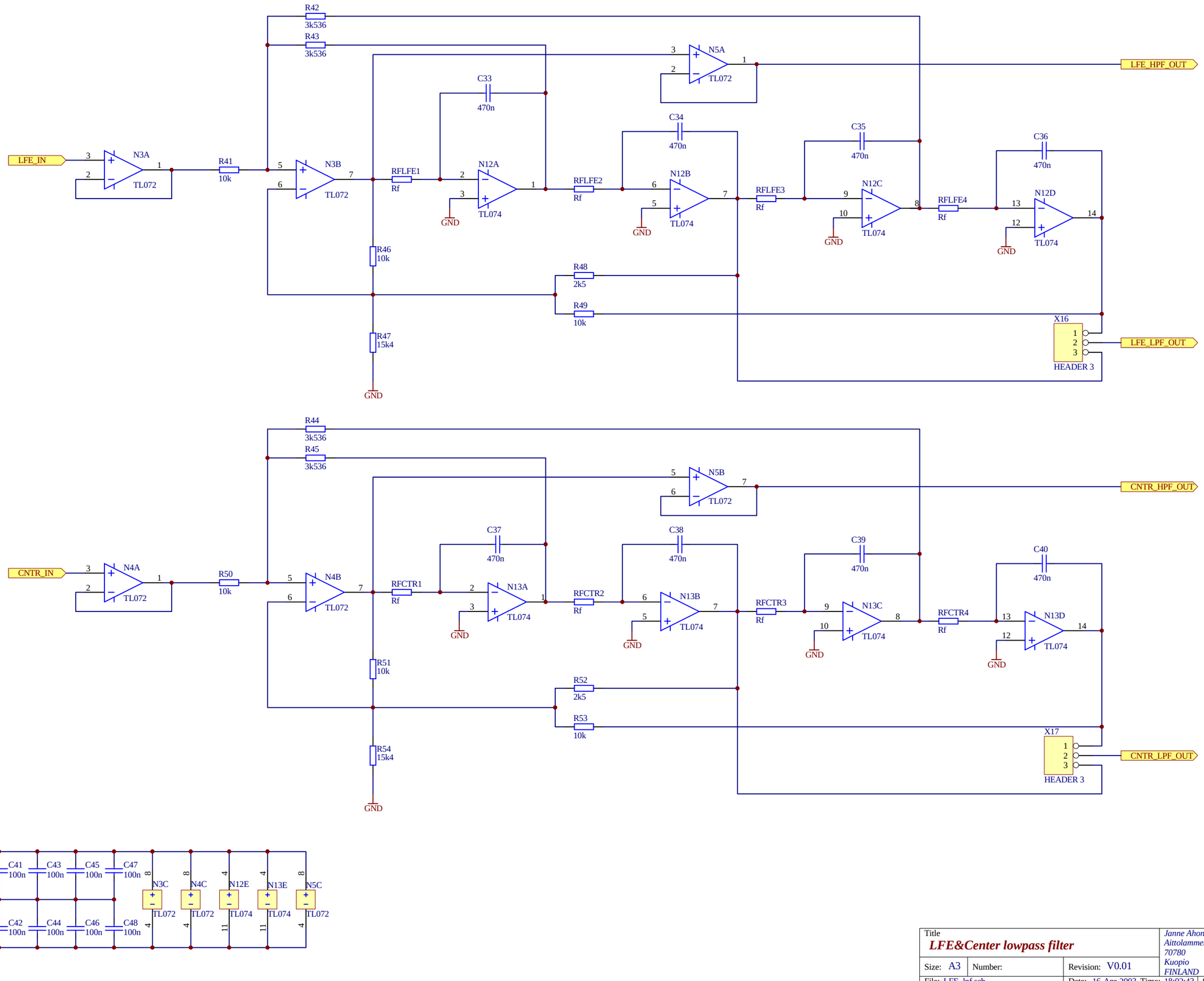

Title: *LFE&Center lowpass filter*			*Janne Ahonen* *Aittolammentie 3 as 7* *70780* *Kuopio* *FINLAND*
Size: A3	Number:	Revision: V0.01	
File: LFE_lpf.sch		Date: 16-Apr-2003 Time: 18:02:43	Sheet 3 of 6

Protel Technology

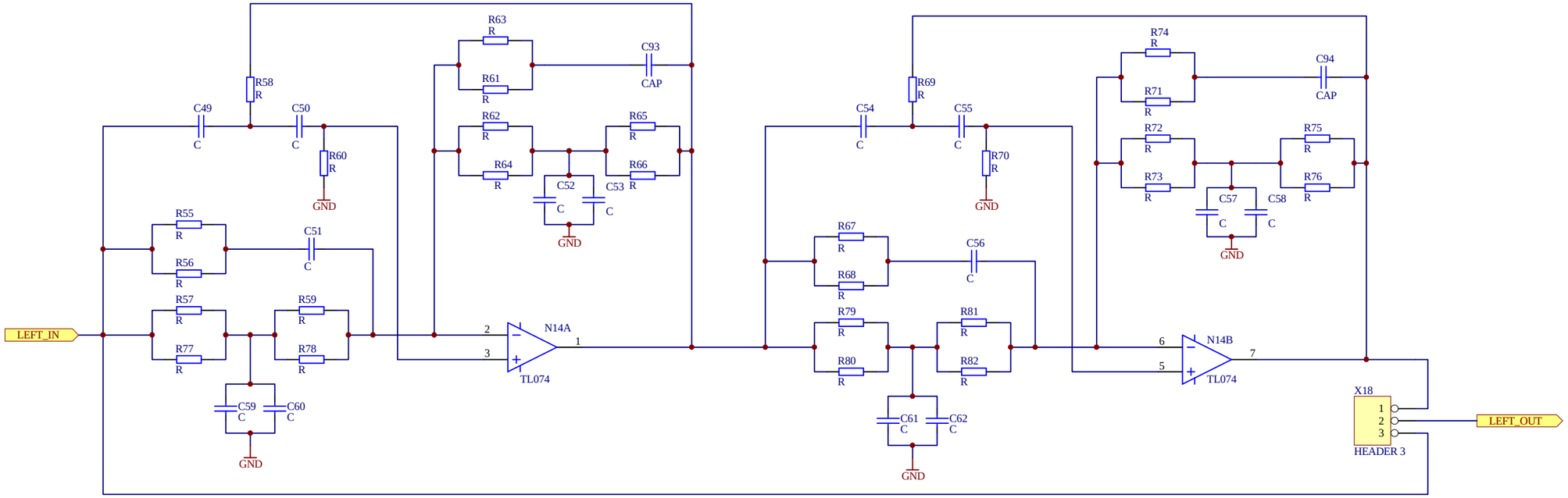

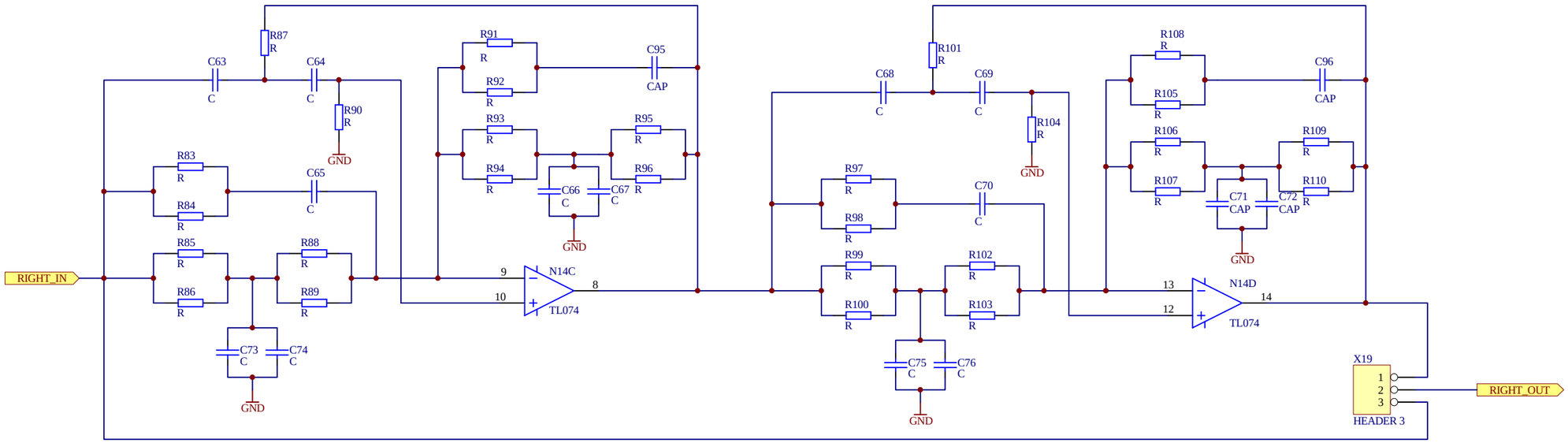

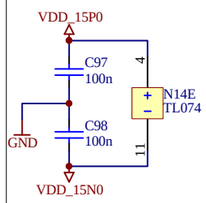

Title: *Linkwitz transform/Highpass filters*			Janne Ahonen Aittolammentie 3 as 7 70780 Kuopio FINLAND
Size: A3	Number:	Revision: V0.02	
File: SubEQ.sch		Date: 16-Apr-2003 Time: 18:02:44	Sheet 4 of 6

Protel Technology

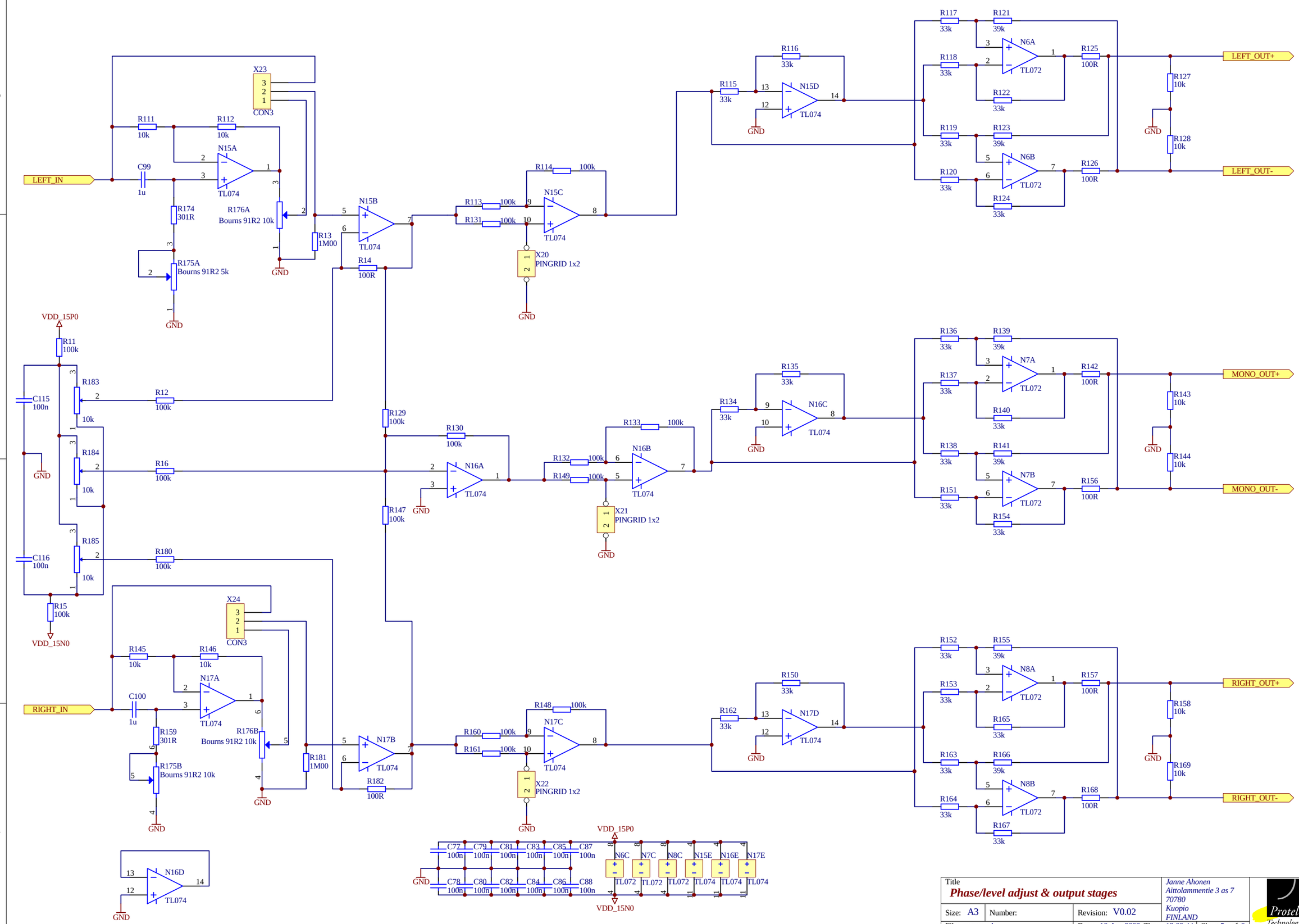

Title			
Phase/level adjust & output stages			*Janne Ahonen* *Aittolammentie 3 as 7* *70780* *Kuopio* *FINLAND*
Size: A3	Number:	Revision: V0.02	
File: output.sch		Date: 16-Apr-2003 Time: 18:02:44	Sheet 5 of 6

Protel Technology

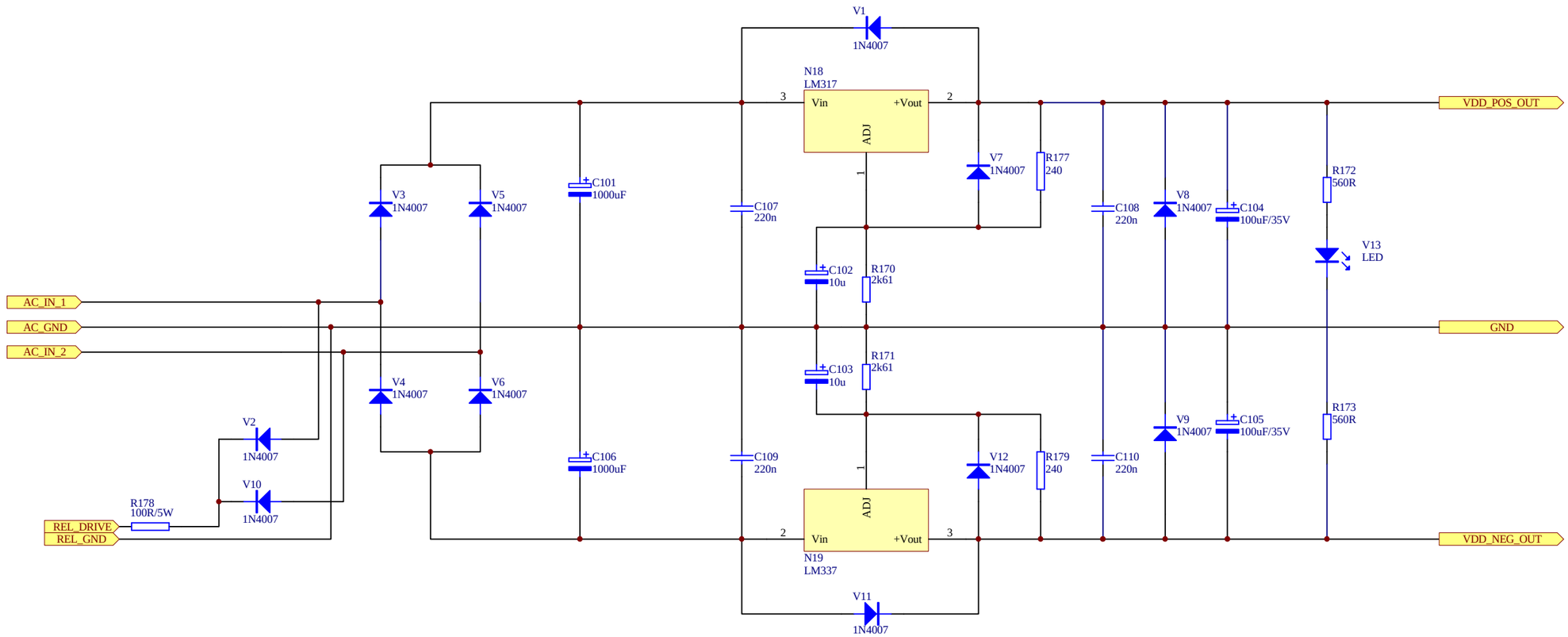

Title **Power**			Janne Ahonen Aittolammentie 3 as 7 70780 Kuopio FINLAND
Size: A3	Number:	Revision:	
File: power.sch		Date: 16-Apr-2003 Time: 18:02:45	Sheet 6 of 6

Protel Technology